stûv

SL30C1

The essential fire



The s30C family includes three wood stove models offering many possibilities: three doors for three modes of operation, 360° rotation, a heat accumulator and even the possibility of barbecuing year-round.

stoves

freestanding appliance whose installation does not need any finishing



s[30C]one p.5



s[30C] p.11



s[30C]H p.21



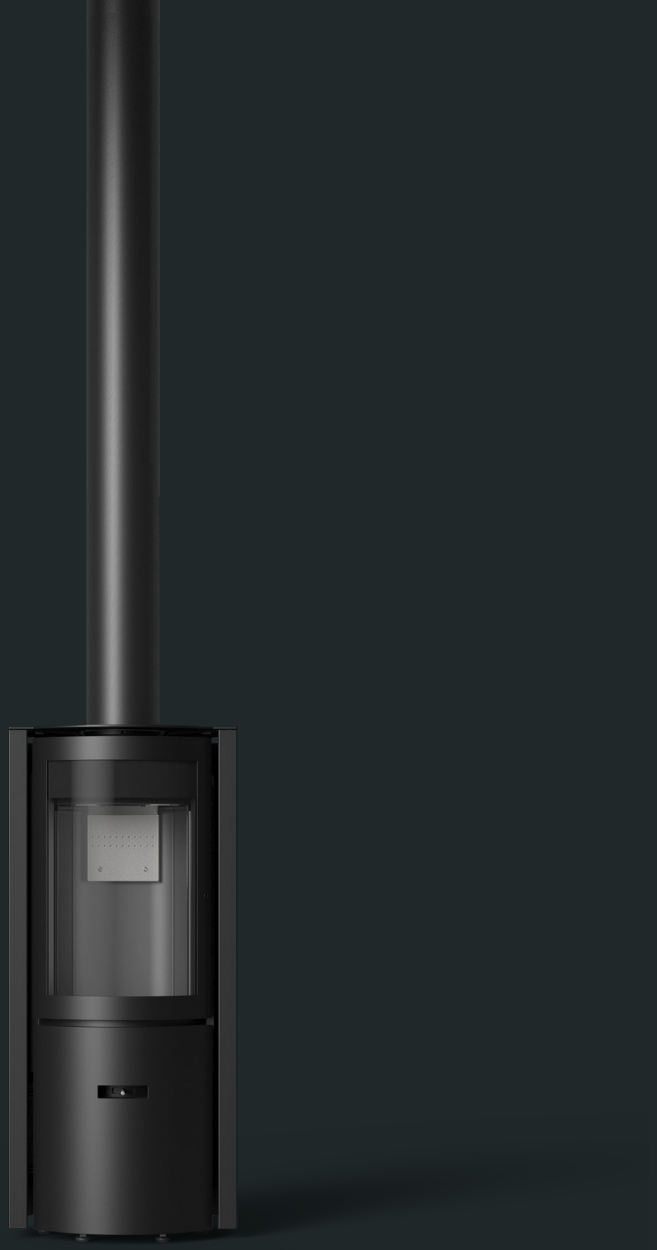

The s30C models are wood-burning stoves providing a performance that meets today's supplementary heating needs and standards. They can heat a space of up to 900 square feet with minimal fine particulate emissions.

s[30C]one



The s30C-one can be turned 360°. Its characteristic black colour highlights the flames while the curved shape of its unique glass door gives a spectacular view of the fire.

Performances		
	Fine particle emissions	1.8 g/h
	Wood consumption	5.5 lb/h
	Efficiency (EPA)	74 %
	Maximum heat output	47 000 BTU/h
	EPA heat output	17 049 BTU/h
	Nominal heat output	33 000 BTU/h

s[30C]one



Certifications	UL / ULC / EPA
Combustion chamber	1 ft^3
Logs - Maximum length	16"
Estimated heating area	900 ft^2
Weight	248 lb

To ensure dimensions, performance data and other prerequisites for a safe installation that is compliant with current regulations, always refer to the installation instructions available on the website www.stuvamerica.com.

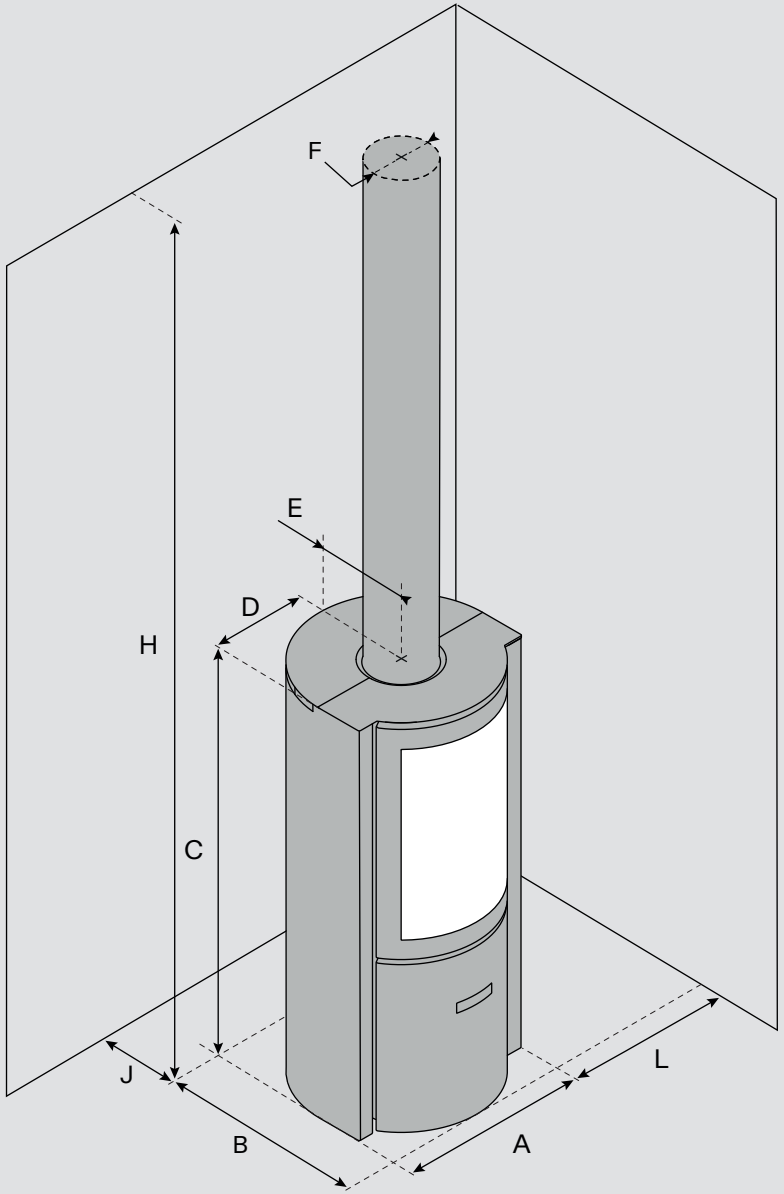

s[30C]one

[A] Width	18 5⁄16"
[B] Depth	17 5⁄8"
[C] Height	40 7⁄8"
[D] Center chimney - side	9 1⁄4"
[E] Center chimney - back	9 1⁄8"
[F] Chimney diameter	6"
[H] Min. ceiling clearance	84"
[J] Min. back clearance	8"
[L] Min. side clearance	8"
Ø Outside air connection	4"
Color	StûvBlack
Door	Glass door
Rotation	360°

Glass

Width	11 13⁄16"
Height	18 9⁄16"

To ensure dimensions, performance data and other prerequisites for a safe installation that is compliant with current regulations, always refer to the installation instructions available on the website www.stuvamerica.com.



The cylindrical shape and minimalist design of the s30C suit any decor, making these models timeless.

s[30C]



The s30C models have three doors for three modes of operation. This concept, which has revolutionized the stove and fireplace industry, lets users choose the mode of operation they prefer in the moment. The glass door provides abundant warmth along with an exceptional view of the fire. The full door spreads comforting heat for many hours. The convenient and functional loading door makes it possible to quickly add a piece of wood or use the BBQ grill.

Performances		
	Fine particle emissions	1.8 g/h
	Wood consumption	5.5 lb/h
	Efficiency (EPA)	74 %
	Maximum heat output	47 000 BTU/h
	EPA heat output	17 049 BTU/h
	Nominal heat output	33 000 BTU/h

s[30C]



Certifications	UL / ULC / EPA
Combustion chamber	1 ft^3
Logs - Maximum length	16"
Estimated heating area	900 ft^2
Weight	284 lb

To ensure dimensions, performance data and other prerequisites for a safe installation that is compliant with current regulations, always refer to the installation instructions available on the website www.stuvamerica.com.

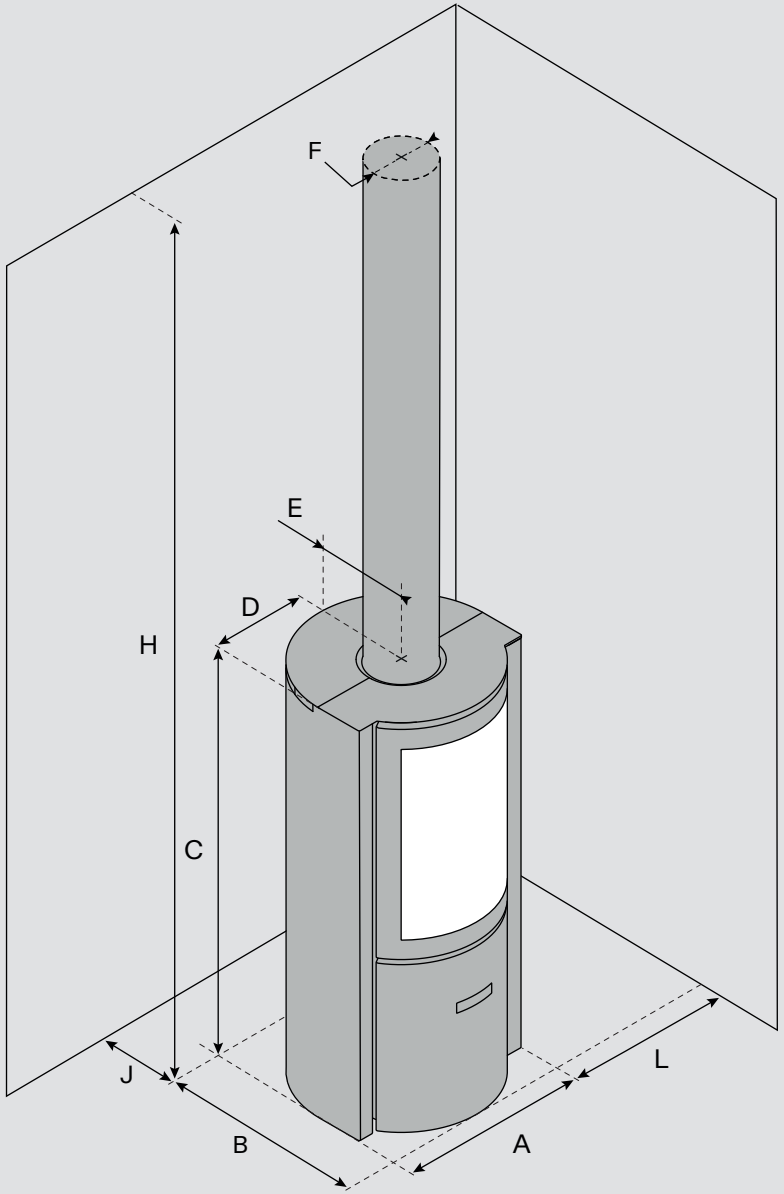

s[30C]

[A] Width	18 5/16"
[B] Depth	17 5/8"
[C] Height	40 7/8"
[D] Center chimney - side	9 1/4"
[E] Center chimney - back	9 1/8"
[F] Chimney diameter	6"
[H] Min. ceiling clearance	84"
[J] Min. back clearance	8"
[L] Min. side clearance	8"
Ø Outside air connection	4"
Color	StûvGrey
Doors	Glass, loading and full door
Rotation	360°

Glass

Width	11 13/16"
Height	18 9/16"

To ensure dimensions, performance data and other prerequisites for a safe installation that is compliant with current regulations, always refer to the installation instructions available on the website www.stuvamerica.com.

The s30C is the only wood stove in the world with three doors for three modes of operation. This unique concept has revolutionized the stove and fireplace industry, creating an appliance that offers three ways to enjoy the warmth of a wood fire. And it's easy to use. Simply turn the rotating drum with the removable handle to switch from one door to another.





Full door



Loading door



Glass door



s30C

© Photo : Katrina Ramsvik, Architecture : Mafcohouse for Nortehaus



All s30C models can be turned 360°. Admire the view of the fire in the living room, then turn the stove to enjoy the same atmosphere from the dinner table. Whether installed in a corner, along a wall or in the middle of a room, s30C appliances will enhance any room they are in.

s[30C]H



The s30C-H has three doors for three modes of operation like the s30C, but stands out for its heat accumulator option. Made of refractory bricks, the accumulator absorbs the heat from the fire. When the fire goes out, the s30C-H continues to release warmth for several more hours.

Performances		
	Fine particle emissions	1.8 g/h
	Wood consumption	5.5 lb/h
	Efficiency (EPA)	74 %
	Maximum heat output	47 000 BTU/h
	EPA heat output	17 049 BTU/h
	Nominal heat output	33 000 BTU/h

s[30C]H



Certifications	UL / ULC / EPA
Combustion chamber	1 ft^3
Logs - Maximum length	16"
Estimated heating area	900 ft^2
Weight	340 lb (+330 lb)

To ensure dimensions, performance data and other prerequisites for a safe installation that is compliant with current regulations, always refer to the installation instructions available on the website www.stuvamerica.com.

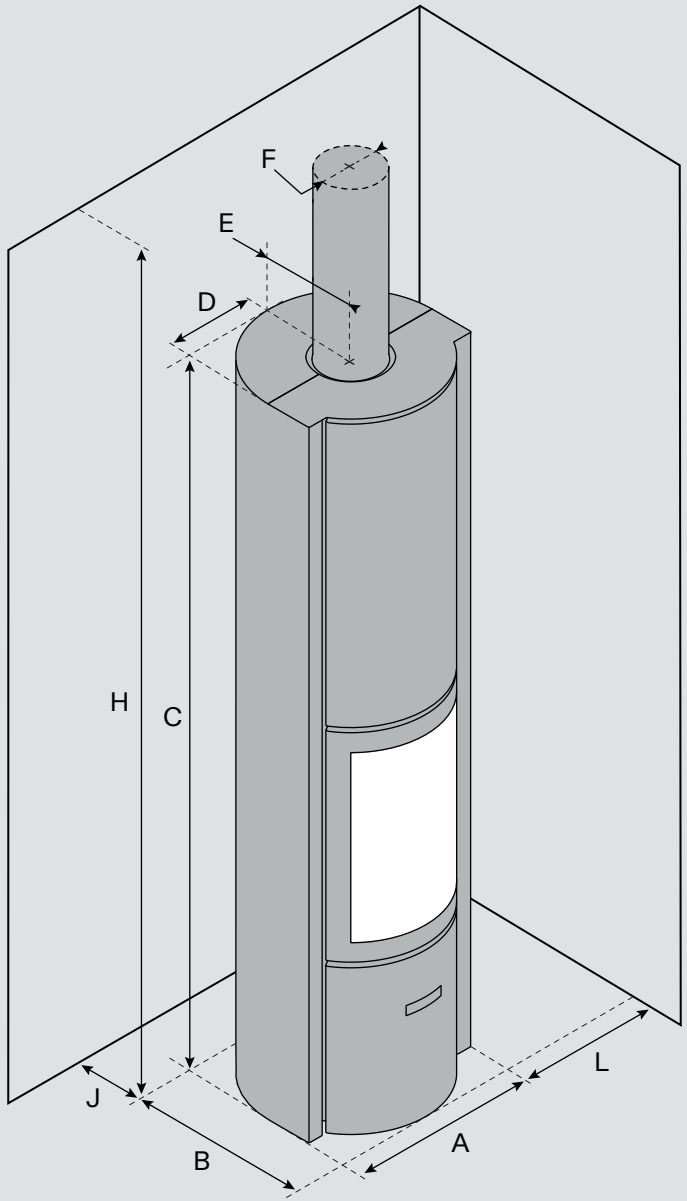

s[30C]H

[A] Width	18 5⁄16"
[B] Depth	17 5⁄8"
[C] Height	70 7⁄8"
[D] Center chimney - side	9 1⁄4"
[E] Center chimney - back	9 1⁄8"
[F] Chimney diameter	6"
[H] Min. ceiling clearance	25 1⁄8"
[J] Min. back clearance	8"
[L] Min. side clearance	8"
Ø Outside air connection	4"
Color	StûvGrey
Doors	Glass, loading and full door
Rotation	360°

Glass

Width	11 13⁄16"
Height	18 9⁄16"

To ensure dimensions, performance data and other prerequisites for a safe installation that is compliant with current regulations, always refer to the installation instructions available on the website www.stuvamerica.com.

Redefining the fireplace



s30C

© Jonanthony James



s30C-H

© Karolina Katarzyna Krupa

The s30C's many accessories offer a host of possibilities. The floor plate and mobile log rack beautifully complete any installation and make it possible to customize each home.

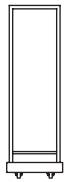

Small mobile log rack

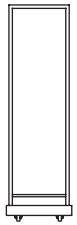

Large mobile log rack

	Small mobile log rack	Large mobile log rack
Width	13 ⅜"	15 ½"
Height	40 ½"	50 ¾"
Depth	15 ¾"	20 ½"

Floor plates

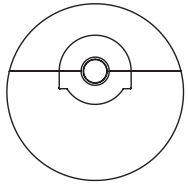

0°

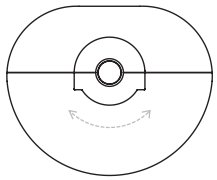

90°

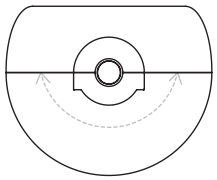

180°

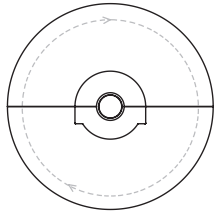

360°

BBQ kit

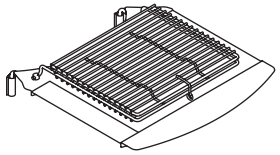

Choosing an
s30C is to benefit
from a customized
heating experience



s[30C]

[PLEASANT] The cast iron combustion chamber ensures a gently spreading heat. [INGENIOUS] A mobile deflector activates when one of the doors is open or when in loading door mode, to evacuate any smokes and prevent any backflow into the room. [USEFUL] The double wall that surrounds the back and sides of the unit allows for an installation eight inches away from all combustible material. [INNOVATIVE] Secondary combustion of the gases increases heat production while minimizing the release of fines particulates into the atmosphere. [SIMPLE] Each door is on hinges to make it easy to clean the glass. [FUNTIONAL] A removable ash pan is built into the bottom of the appliance, accumulating the ashes for easy removal and disposal. [CLEAN] A flow of air sweeps the glass and carries away the dust created by combustion, for a flawless view of the fire. [DURABLE] The high-quality materials, precision finish and simple shape ensure its long-term performance and substainability.



s30C-one

© Valerie Lacroix - northwildmedia

s[6]



s[16]



s[21]



s[21CLAD]

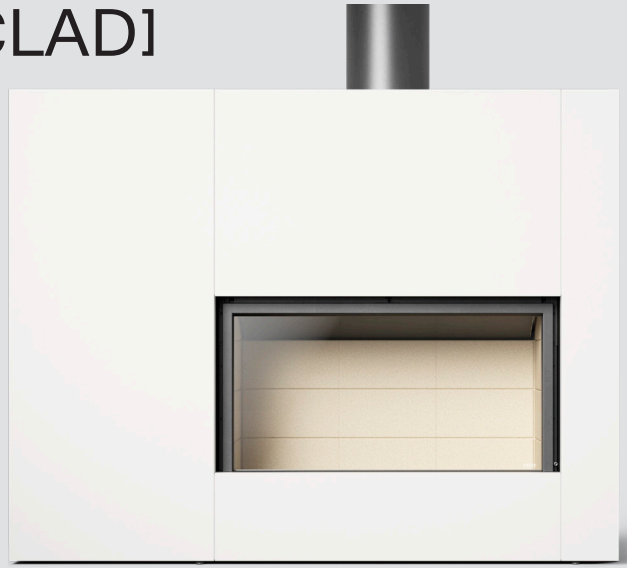

s[30C]



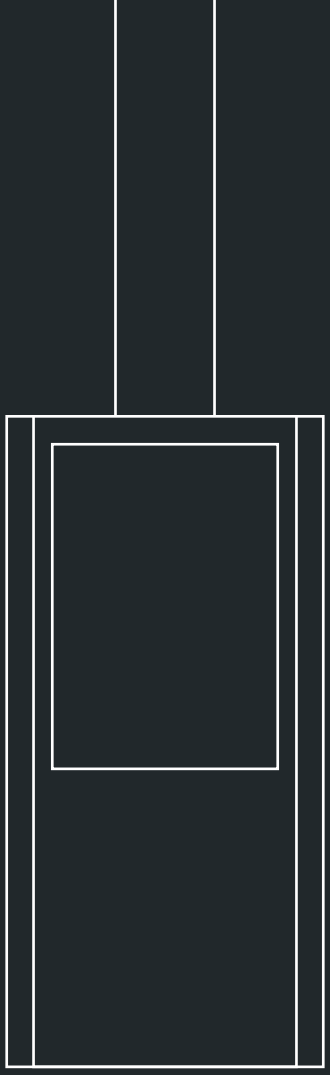

Stûv fireplaces are designed by Stûv sa – Belgium – stuv.com
and manufactured in North America by Stûv America inc. – Canada – stuvamerica.com

This document is non contractual, Stûv America reserves the right to make modifications without notice.

10/24 - EN - 93113024