stûv

S[16]

The essentiel fire



Available in four models and two sizes, s16 are perfect for wood heating enthusiasts. Their minimalist design showcase the flames, providing an unparalleled experience.

insert

appliance to be inserted into an existing masonry hearth



s[16]in p.5

stoves

freestanding appliance that does not need any finishing

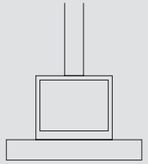

s[16]cube p.17



s[16]H p.25

fireplace

appliance to be installed in a wall



s[16]Z p.33

The s16 are designed to produce the maximum amount of heat while simultaneously ensuring that it emits a minimal quantity of particulates into the atmosphere.



s[16]in

58

68

The s16-in is a wood-burning fireplace insert designed for installation in an existing masonry hearth. It meets current wood heating requirements while preserving the charm and authenticity of fireplaces of yore.

Performances

Fine particle emissions	1.5 g/h	1.9 g/h
Wood consumption	4.2 lb/h	4.2 lb/h
Efficiency (EPA)	70 %	62 %
Maximum heat output	65 000 BTU/h	82 000 BTU/h
EPA heat output	22 432 BTU/h	23 727 BTU/h
Nominal heat output	46 000 BTU/h	50 000 BTU/h

s[16]in

	58	68
		
Certifications	UL / ULC / EPA	UL / ULC / EPA
Combustion chamber	1.6 ft^3	1.9 ft^3
Logs - Maximum length	17"	21"
Estimated heating area	1 400 ft^2	1 650 ft^2
Weight	180 lb	205 lb

To ensure dimensions, performance data and other prerequisites for a safe installation that is compliant with current regulations, always refer to the installation instructions available on the website www.stuvamerica.com.

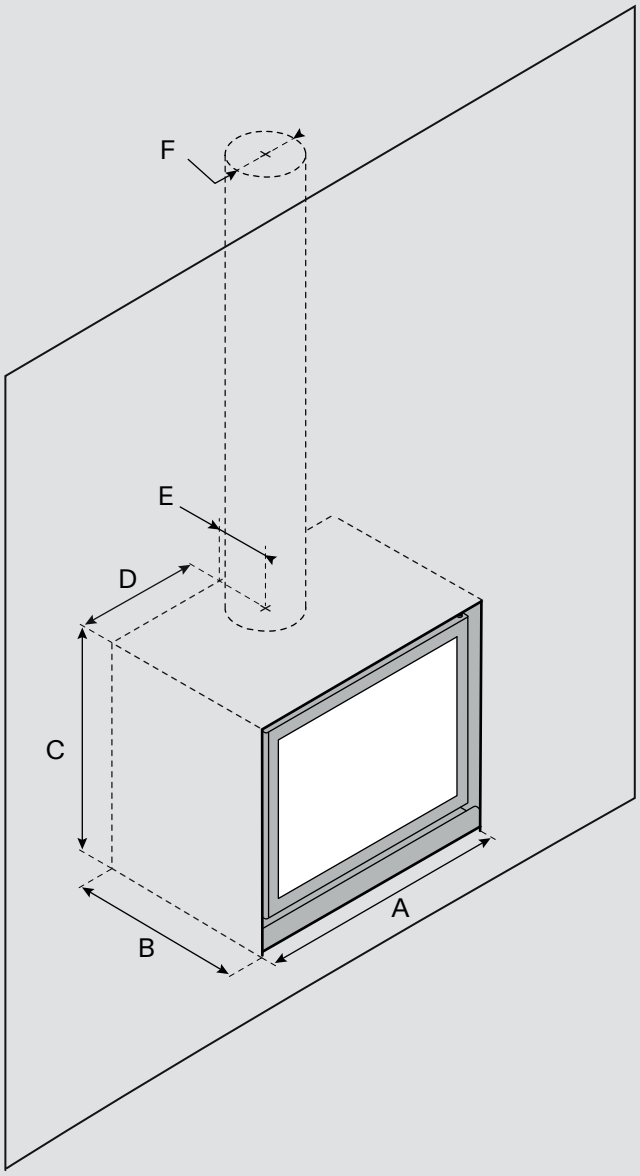

s[16]in

	58	68
[A] Width	22 7/8"	26 3/4"
[B] Depth	17 5/16"	17 5/16"
[C] Height	23 7/8"	23 7/8"
[D] Center chimney - side	11 7/16"	13 3/8"
[E] Center chimney - back	4 7/16"	4 7/16"
[F] Chimney diameter	6" or 7"	6" or 7"
Ø Outside air connection	4"	4"
Color	StûvGrey	StûvGrey

Glass

	58	68
Width	17 5/8"	21 5/8"
Height	16 9/16"	16 9/16"

To ensure dimensions, performance data and other prerequisites for a safe installation that is compliant with current regulations, always refer to the installation instructions available on the website www.stuvamerica.com.



		58	68
Thin edge frame ⅛" contour	W	22 ⅞"	26 ¾"
	H	23 ⅞"	23 ⅞"
Picture type frame 2" contour	W	26 ⅜"	30 5⁄16"
	H	25 ½"	25 ½"
Picture type frame 4" contour	W	30 5⁄16"	34 ¼"
	H	27 7⁄16"	27 7⁄16"
Picture type frame 6" contour	W	34 ¼"	38 3⁄16"
	H	29 7⁄16"	29 7⁄16"

Frames

The s16-in frames are specifically designed for an easy finish between the fireplace and the masonry hearth without compromising the appliance's clean lines.

Nothing but clean lines



s16-cube 68

© Photo : Cindy Blazevic, Architecture : V-FA



The s16 have a hinged door that opens with a removable key. They do not have a door handle to guarantees an unobstructed view of the flames so you fully experience that state of well-being unique to wood fires.

s[16]cube

58

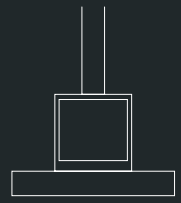

68

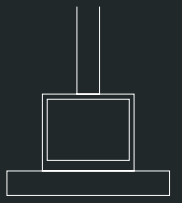

The s16-cube offers many installation possibilities. It can be installed on the s16-cube podium set or on a custom-made piece of furniture. The precision of its finish, as well as the clean, straight lines of this model, inspire elegance and timelessness.

Performances

Fine particle emissions	1.5 g/h	1.9 g/h
Wood consumption	4.2 lb/h	4.2 lb/h
Efficiency (EPA)	70 %	62 %
Maximum heat output	65 000 BTU/h	82 000 BTU/h
EPA heat output	22 432 BTU/h	23 727 BTU/h
Nominal heat output	46 000 BTU/h	50 000 BTU/h

s[16]cube

	58	68
		
Certifications	UL / ULC / EPA	UL / ULC / EPA
Combustion chamber	1.6 ft^3	1.9 ft^3
Logs - Maximum length	17"	21"
Estimated heating area	1 400 ft^2	1 650 ft^2
Weight	250 lb	272 lb

To ensure dimensions, performance data and other prerequisites for a safe installation that is compliant with current regulations, always refer to the installation instructions available on the website www.stuvamerica.com.

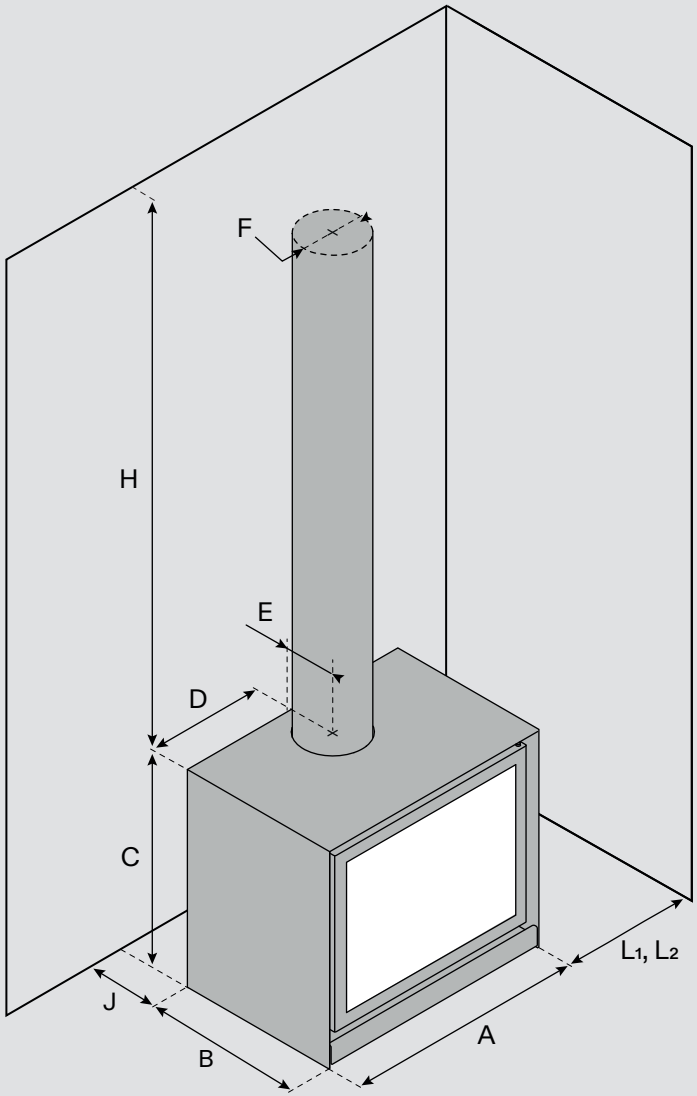

s[16]cube

	58	68
[A] Width	22 7/8"	26 3/4"
[B] Depth	18"	18"
[C] Height	24 5/8"	24 5/8"
[D] Center chimney - side	11 7/16"	13 3/8"
[E] Center chimney - back	5 1/8"	5 1/8"
[F] Chimney diameter	6" or 7"	6" or 7"
[H] Min. ceiling clearance	24 1/2"	24 1/2"
[J] Min. back clearance	7"	7"
[L1] Min. side clearance	12"	12"
[L2] Recess min. side clearance	15"	15"
Ø Outside air connection	4"	4"
Colors	StûvGrey StûvBlack	StûvGrey StûvBlack

Glass

	58	68
Width	17 5/8"	21 5/8"
Height	16 9/16"	16 9/16"

To ensure dimensions, performance data and other prerequisites for a safe installation that is compliant with current regulations, always refer to the installation instructions available on the website www.stuvamerica.com.



s16-cube 58

© Robert Van Dale

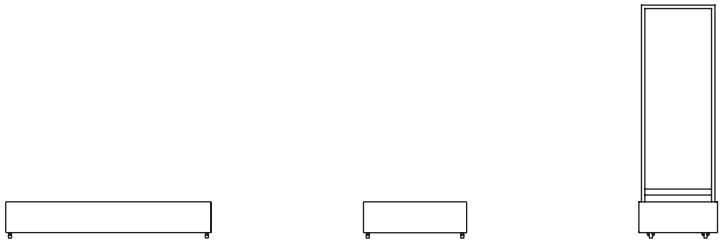

	Podium	Drawer for accessories	Logs cart with drawer
Width	47 ¼"	23 ⅝"	18 ⅛"
Height	8 ⅜"	8 ⅜"	53 ¾"
Depth	23 ¼"	23 ¼"	23 ¼"



Colors

StûvGrey White RAL 9010

Podium set

Sold separately, the s16-cube podium allows the flexibility to create arrangements that best suit any project.



The s16 open up a world of possibilities. With the podium set or with built-in wood storage, s16 units, known for their versatility, perfectly suit all spaces.

s[16]H

58

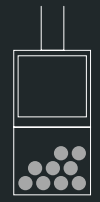

68

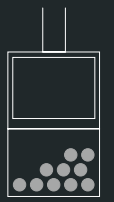

The s16-H combines the s16-cube with wood storage under the appliance, making it both good-looking and practical.

Like its counterpart, the s16-cube, the s16-H is characterized by a seamless finish.

Performances

Fine particle emissions	1.5 g/h	1.9 g/h
Wood consumption	4.2 lb/h	4.2 lb/h
Efficiency (EPA)	70 %	62 %
Maximum heat output	65 000 BTU/h	82 000 BTU/h
EPA heat output	22 432 BTU/h	23 727 BTU/h
Nominal heat output	46 000 BTU/h	50 000 BTU/h

s[16]H

	58	68
		
Certifications	UL / ULC / EPA	UL / ULC / EPA
Combustion chamber	1.6 ft^3	1.9 ft^3
Logs - Maximum length	17"	21"
Estimated heating area	1 400 ft^2	1 650 ft^2
Weight	332 lb	362 lb

To ensure dimensions, performance data and other prerequisites for a safe installation that is compliant with current regulations, always refer to the installation instructions available on the website www.stuvamerica.com.

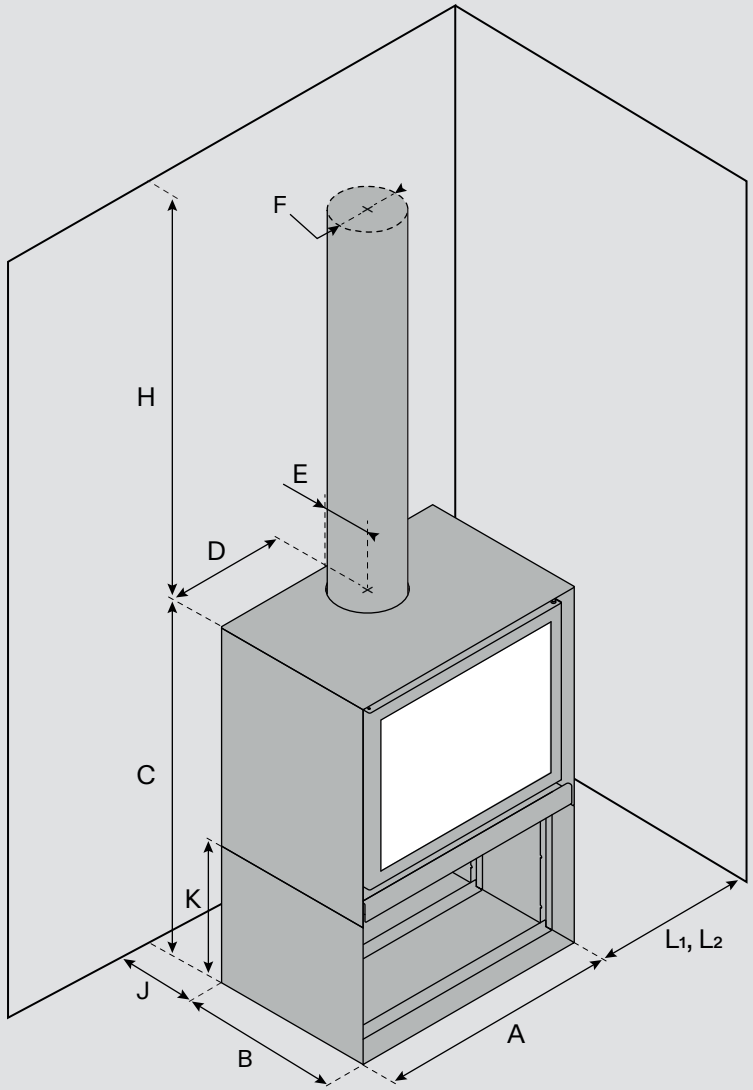

s[16]H

	58	68
[A] Width	22 ⅞"	26 ¾"
[B] Depth	18"	18"
[C] Height	39 ¾"	39 ¾"
[D] Center chimney - side	11 7⁄16"	13 ⅜"
[E] Center chimney - back	5 ⅛"	5 ⅛"
[F] Chimney diameter	6" or 7"	6" or 7"
[H] Min. ceiling clearance	24 ½"	24 ½"
[J] Min. back clearance	7"	7"
[K] Log storage height	15 ¾"	15 ¾"
[L1] Min. side clearance	12"	12"
[L2] Recess min. side clearance	15"	15"
Ø Outside air connection	4"	4"
Colors	StûvGrey StûvBlack	StûvGrey StûvBlack

Glass

	58	68
Width	17 5⁄8"	21 5⁄8"
Height	16 9⁄16"	16 9⁄16"

To ensure dimensions, performance data and other prerequisites for a safe installation that is compliant with current regulations, always refer to the installation instructions available on the website www.stuvamerica.com.



s16-H 58

© Charles-Olivier Photographie Intérieure

The s16's efficiency is astonishing. They quickly spreads abundant heat through the room, creating an immediate sensation of soothing comfort.



s[16]Z

58

68

The s16-Z fireplace fits anywhere. Whether in a renovation or a new build, the compact size of this model make it easy to integrate into all types of spaces.

In addition to meeting the most stringent fine particle emission standards, it efficiently warms the room and offers an expansive view of the flames.

Performances

Fine particle emissions	1.5 g/h	1.9 g/h
Wood consumption	4.2 lb/h	4.2 lb/h
Efficiency (EPA)	70 %	62 %
Maximum heat output	65 000 BTU/h	82 000 BTU/h
EPA heat output	22 432 BTU/h	23 727 BTU/h
Nominal heat output	46 000 BTU/h	50 000 BTU/h

s[16]Z

	58	68
		
Certifications	UL / ULC / EPA	UL / ULC / EPA
Combustion chamber	1.6 ft^3	1.9 ft^3
Logs - Maximum length	17"	21"
Estimated heating area	1 400 ft^2	1 650 ft^2
Weight	232 lb	261 lb

To ensure dimensions, performance data and other prerequisites for a safe installation that is compliant with current regulations, always refer to the installation instructions available on the website www.stuvamerica.com.

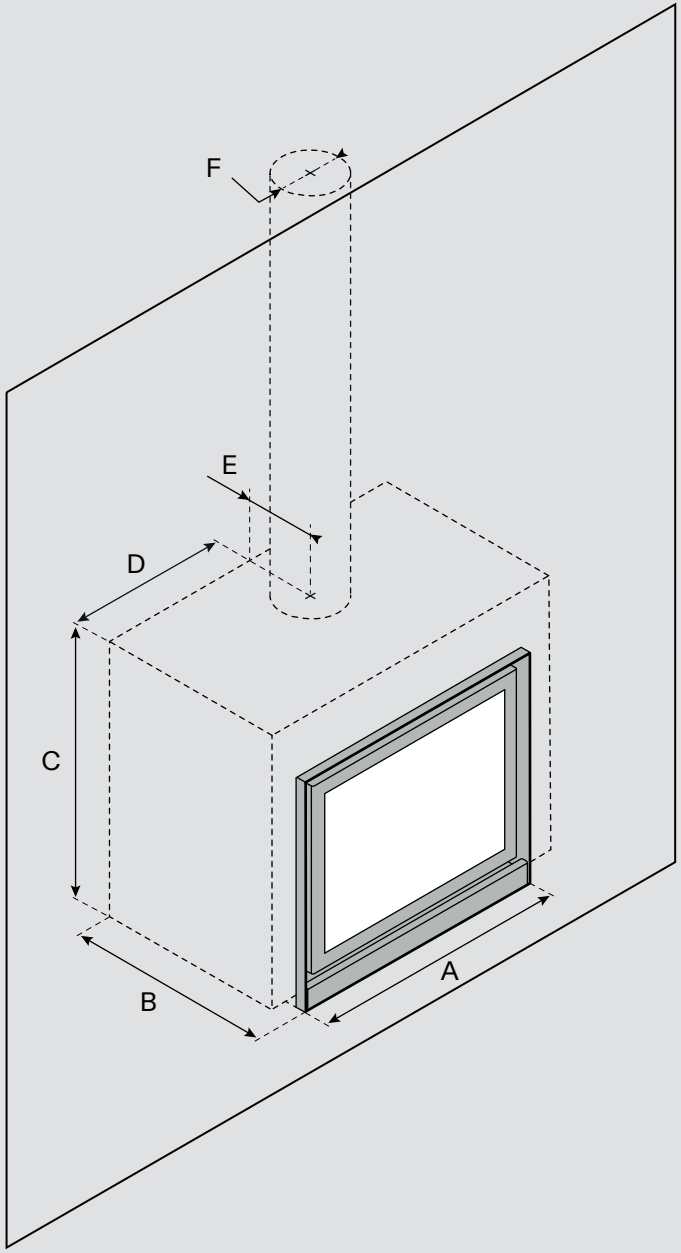

s[16]Z

	58	68
[A] Width	29 3⁄8"	33 5⁄16"
[B] Depth (shell)	19 9⁄16"	19 9⁄16"
[C] Height	29 7⁄8"	29 7⁄8"
[D] Center chimney - side	14 7⁄8"	16 9⁄16"
[E] Center chimney - back	8 1⁄16"	8 1⁄16"
[F] Chimney diameter	6" or 7"	6" or 7"
Ø Outside air duct	4"	4"
Color	StûvGrey	StûvGrey

Glass

	58	68
Width	17 5⁄8"	21 5⁄8"
Height	16 9⁄16"	16 9⁄16"

To ensure dimensions, performance data and other prerequisites for a safe installation that is compliant with current regulations, always refer to the installation instructions available on the website www.stuvamerica.com.



s16-Z 58

© Jonanthony James

		58	68
Thin edge frame ⅛" contour	W	22 ⅞"	26 ¾"
	H	23 ⅞"	23 ⅞"
Picture type frame 2" contour	W	26 ⅜"	30 5⁄16"
	H	25 ½"	25 ½"
Picture type frame 4" contour	W	30 5⁄16"	34 ¼"
	H	27 7⁄16"	27 7⁄16"
Picture type frame 6" contour	W	34 ¼"	38 3⁄16"
	H	29 7⁄16"	29 7⁄16"

Frames

s16-Z frames have a minimalist design to suit all styles and achieve the perfect look.

Choosing an s16 guarantees an unmatched experience and focus on the essential



s[16]

[SIMPLE] No air damper to fiddle with: simply light the fire and enjoy the warmth. [EFFICIENT] Vermiculite panels line the combustion chamber, for abundant warmth that spreads quickly. [INGENIOUS] A mobile deflector activates when the door is open to evacuate any smoke fumes, preventing any significant backflow into the room. [RELIABLE] The design of the combustion chamber keeps the metal from getting distorted due to the heat and prevents disruptive sounds. [INNOVATIVE] Secondary combustion of the gases increases heat production while minimizing the release of fine particles into the atmosphere. [SOLID] Latches at the top and bottom of the door keep it from deforming and ensure an optimal seal. [CLEAN] Air sweeps the glass and carries away any dust from combustion, for a clear view of the fire. [DURABLE] The high-quality materials, precision finish and simple shape ensure its long-term performance and sustainability.



s16-H 68

s[6]



s[16]



s[21]



s[21CLAD]

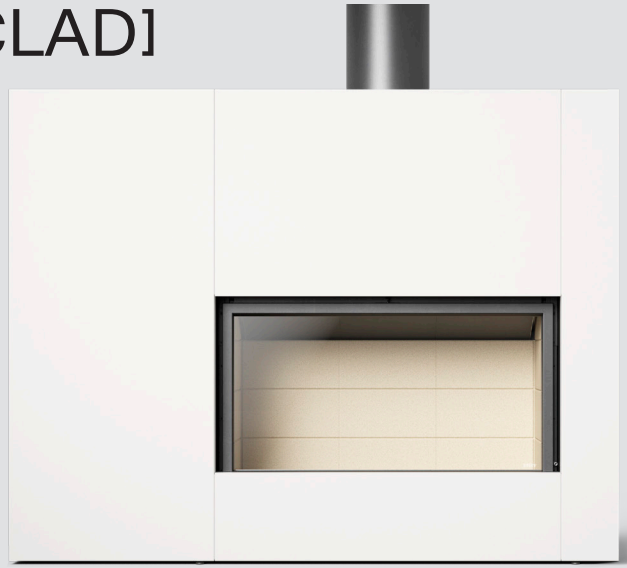

s[30C]



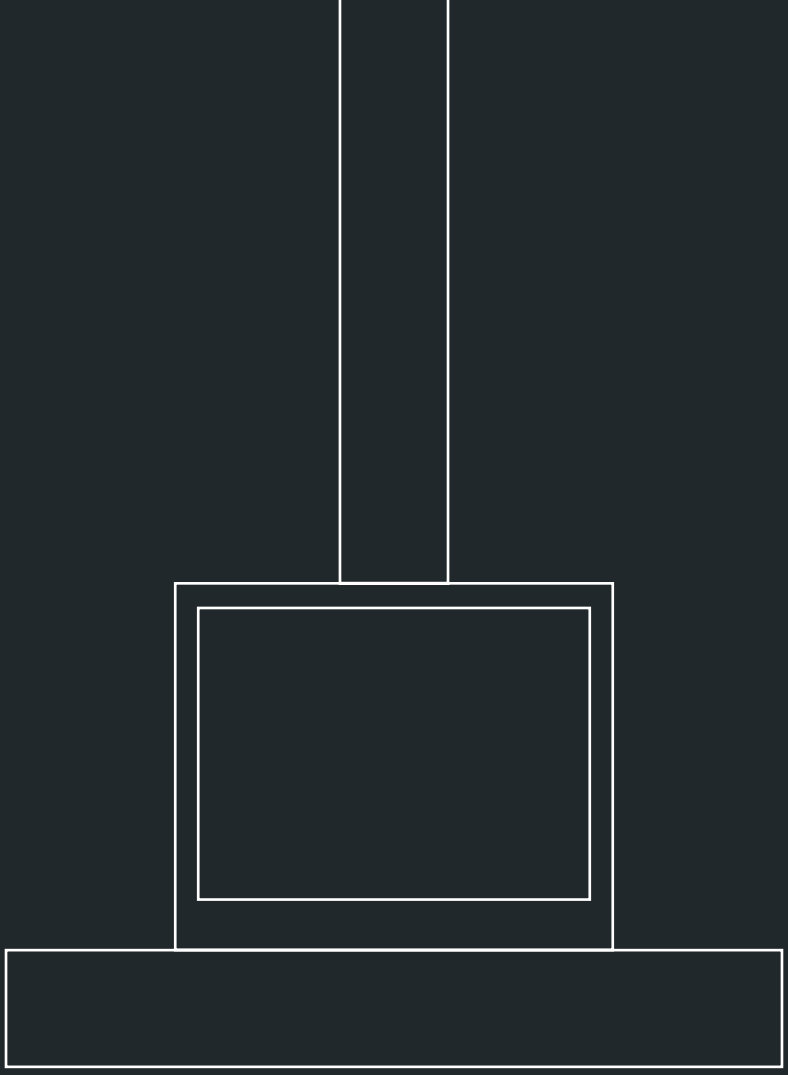

Stûv fireplaces are designed by Stûv sa – Belgium – stuv.com
and manufactured in North America by Stûv America inc. – Canada – stuvamerica.com

This document is non contractual, Stûv America reserves the right to make modifications without notice.

10/24 - EN - 93113018